REVISIONS					
ECN	부호	날짜	내용	수정자	승인자
-	-	2022.00.00	-	-	J.W HEO

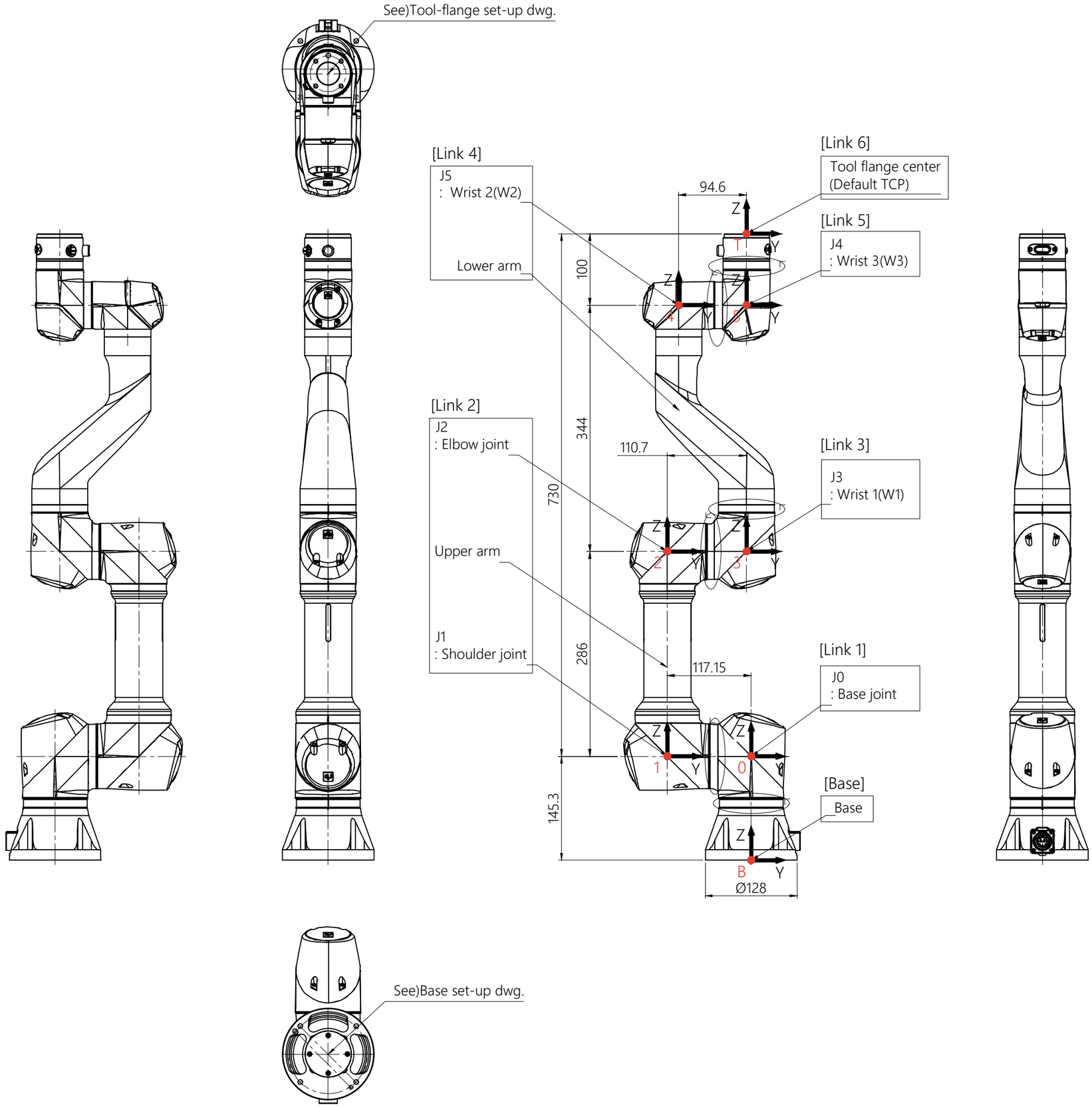

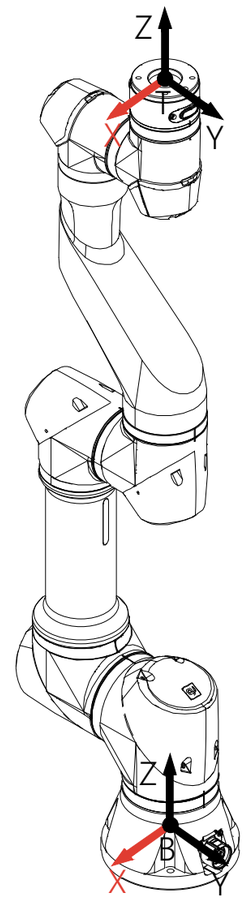

NOTE	
1)	This drawing is an assembly drawing of RB3-730ES.

RAINBOW ROBOTICS	PART NAME RB3-730ES(U-Version)			
	DRAWING NO. -			Rev -
THIS DRAWING MAY NOT BE REPRODUCED WITHOUT PRIOR WRITTEN APPROVAL.	SCALE 1:1	MATERIAL -	DRN. BY T.K AHN	2024.01.18
			CHK'D. BY -	-
TOLERANCE UNLESS OTHERWISE SPECIFIED: XXX : ±0.2 XX : ±0.1 X : ±0.1 X.X : ±0.05 ANGLE : ±0.5°	SIZE A2	REFERENCE -	APPR'D BY J.W HEO	2024.01.18
			Page 1 of 1	
단위 : MM	COPYRIGHT (C) RAINBOW ROBOTICS CORP. ALL RIGHTS RESERVED.			

REVISIONS					
ECN	부호	날짜	내용	수정자	승인자
-	-	2022.00.00	-	-	J.W HEO

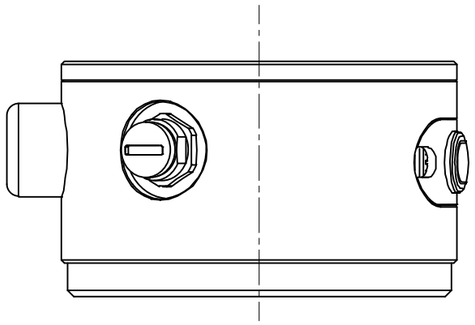

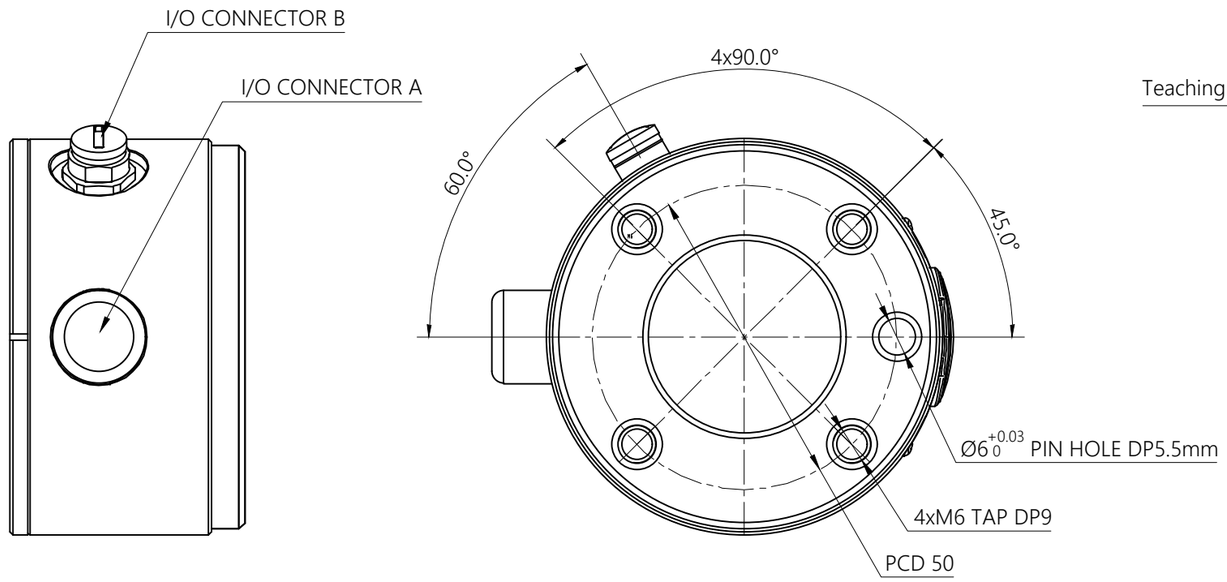

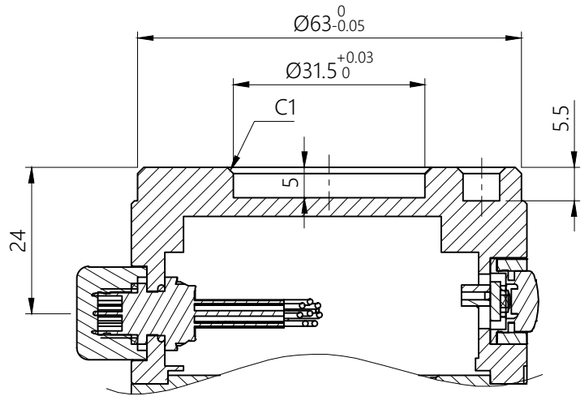

SECTION A-A

I/O Connector B	
1) I/O Connector	- M8 female panel mount connector, 8pin - Spec : 76 6618 1111 00008-0200 - Maker : Binder
2) Cable	- M8 male cable connector, 8pin - Spec : 77 3405 0000 50008-0200 - Maker : Binder
3) CAP	- M8 Protecting cap - Spec : 08 2441 000 000 - Maker : Binder

I/O Connector A	
1) I/O Connector	- M8 male panel mount connector, 8pin - Spec : 76 6319 1111 00008-0200 - Maker : Binder
2) Cable	- M8 female cable connector - Spec : 77 3406 0000 50008-0200 - Maker : Binder
3) CAP	- M8 knurling cap - Maker : Rainbow-Robotics

NOTE	
1)	This drawing is a "Tool flange set-up" drawing.
2)	Mechanical interfaces : ISO 9409-1-50-4-M6

RAINBOW ROBOTICS	PART NAME: Tool flange set up_RB3-730ES(U-Version)			
	DRAWING NO.: -			Rev: -
THIS DRAWING MAY NOT BE REPRODUCED WITHOUT PRIOR WRITTEN APPROVAL.	SCALE: 1:1	MATERIAL: -	DRN. BY: T.K AHN	2024.01.18
			CHK'D. BY: -	-
TOLERANCE UNLESS OTHERWISE SPECIFIED: XXX : ±0.2 XX : ±0.1 X : ±0.1 X.X : ±0.05 ANGLE : ±0.5°	SIZE: A3	REFERENCE: -	APPR'D BY: J.W HEO	2024.01.18
			Page: 1 of 1	
단위 : MM	COPYRIGHT (C) RAINBOW ROBOTICS CORP. ALL RIGHTS RESERVED.			

REVISIONS					
ECN	부호	날짜	내용	수정자	승인자
-	-	2022.00.00	-	-	J.W HEO

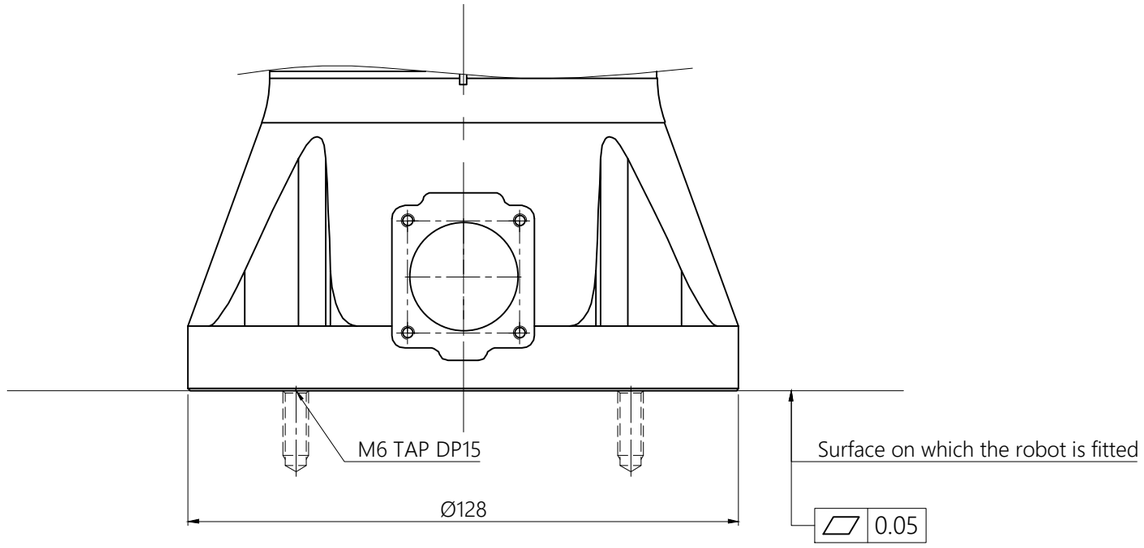

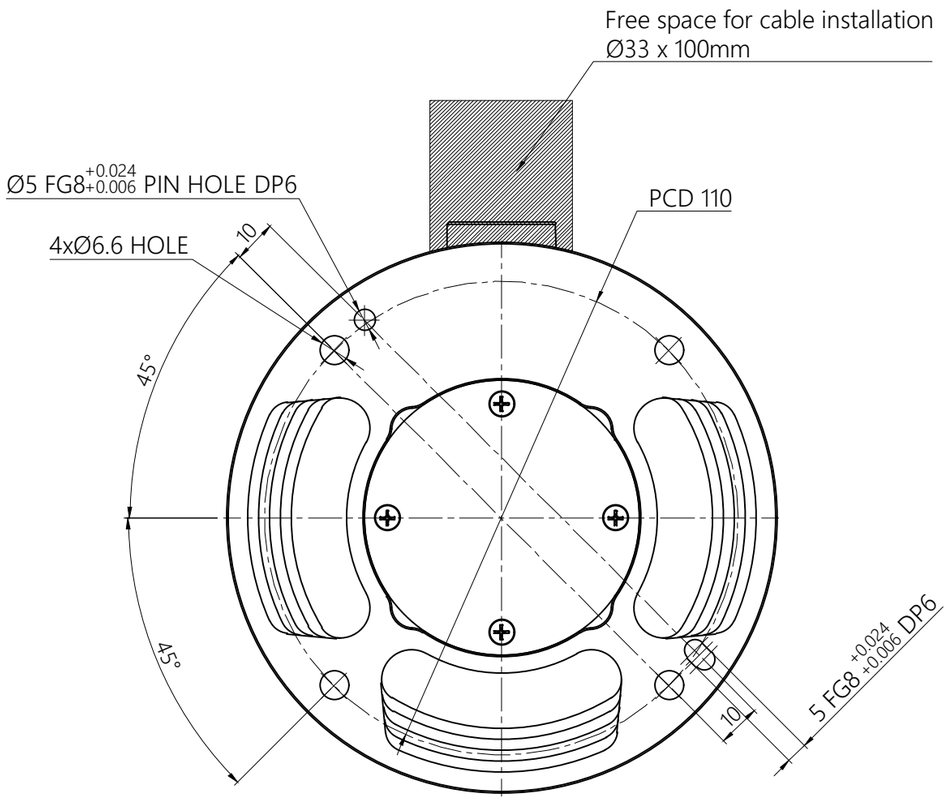

NOTE	
1)	This drawing is a "Base set-up" drawing.

RAINBOW ROBOTICS	PART NAME: Base set-up_RB3-730ES(U-Version)			
	DRAWING NO.: -			Rev: -
THIS DRAWING MAY NOT BE REPRODUCED WITHOUT PRIOR WRITTEN APPROVAL.	SCALE: 1:1	MATERIAL: -	DRN. BY: T.K AHN	2024.01.18
			CHK'D. BY: -	-
TOLERANCE UNLESS OTHERWISE SPECIFIED: XXX : ±0.2, XX : ±0.1, X : ±0.1, X.X : ±0.05, ANGLE : ±0.5°	SIZE: A2	REFERENCE: -	APPR'D BY: J.W HEO	2024.01.18
			Page: 1 of 1	
단위 : MM	COPYRIGHT (C) RAINBOW ROBOTICS CORP. ALL RIGHTS RESERVED.			